UCTX

Set Screw Locking • Wide Inner Ring • Cast Housing • Regreasable

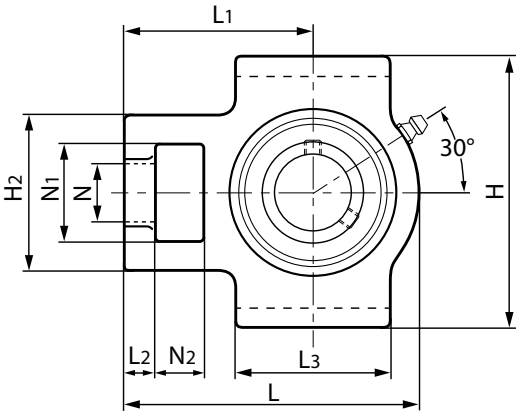

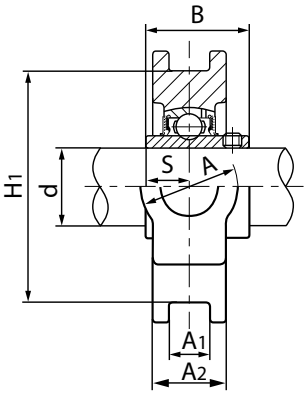

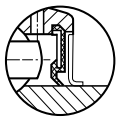

Standard B Type Seal

Optional Triple-lip seal
(+Suffix - R3)

HLU Unit No.	Shaft Diameter in.	Shaft Diameter mm	Dimensions (in.) (mm) L	L1	L2	L3	N	N1	N2	H	H1	H2	A	A1	A2	S	B	Bearing No.	Housing No.	Weight lbs
UCTX05 UCTX05-16	1	25	4.4488 113	2.7559 70	0.3937 10	2.2441 57	0.8661 22	1.4567 37	0.6299 16	4.0157 102	3.5039 89	2.2047 56	1.4567 37	0.5315 13.5	1.1024 28	0.6260 15.9	1.5000 38.1	UCX05 UCX05-16	T206	2.7
UCTX06 UCTX06-19 UCTX06-20	1 9/16 1 ¼	30	5.0787 129	3.0709 78	0.5118 13	2.5197 64	0.8661 22	1.4567 37	0.6299 16	4.0157 102	3.5039 89	2.5197 64	1.4567 37	0.5315 13.5	1.1811 30	0.6890 17.5	1.6890 42.9	UCX06 UCX06-19 UC207-20	T207	3.7
UCTX07-22 UCTX07 UCTX07-23	1 ⅜ 1 7/16	35	5.6693 144	3.4646 88	0.6299 16	3.2677 83	1.1417 29	1.9291 49	0.7480 19	4.4882 114	3.9764 101	3.2677 83	1.9291 49	0.6890 17.5	1.2992 33	0.7480 19	1.9370 49.2	UCX07-22 UCX07 UCX07-23	T208	5.2
UCTX08-24 UCTX08	1 ½	40	5.6693 144	3.4252 87	0.6299 16	3.2677 83	1.1417 29	1.9291 49	0.7480 19	4.6063 117	3.9764 101	3.2677 83	1.9291 49	0.6890 17.5	1.3780 35	0.7480 19	1.9370 49.2	UCX08-24 UCX08	T209	5.6
UCTX09-27 UCTX09-28 UCTX09	1 11/16 1 ¾	45	5.8661 149	3.5433 90	0.6299 16	3.3858 86	1.1417 29	1.9291 49	0.7480 19	4.6063 117	3.9764 101	3.2677 83	1.9291 49	0.6890 17.5	1.4567 37	0.7480 19	2.0315 51.6	UCX09-27 UCX09-28 UCX09	T210	6.0
UCTX10-31 UCTX10 UCTX10-32	1 15/16 2	50	6.7323 171	4.1732 106	0.7480 19	3.7402 95	1.3780 35	2.5197 64	0.9843 25	5.7480 146	5.1181 130	4.0157 102	2.5197 64	1.0630 27	1.4961 38	0.8740 22.2	2.1890 55.6	UCX10-31 UCX10 UC211-32	T211	8.8
UCTX11 UCTX11-35 UCTX11-36	2 3/16 2 ¼	55	7.6378 194	4.6850 119	0.7480 19	4.0157 102	1.3780 35	2.5197 64	1.2598 32	5.7480 146	5.1181 130	4.0157 102	2.5197 64	1.0630 27	1.6535 42	1.0000 25.4	2.5630 65.1	UCX11 UCX11-35 UC212-36	T212	10.5
UCTX12 UCTX12-39	2 7/16	60	8.8190 224	5.3937 137	0.8268 21	4.7638 121	1.6142 41	2.7559 70	1.2598 32	6.5748 167	5.9449 151	4.3701 111	2.7559 70	1.0630 27	1.7323 44	1.0000 25.4	2.5630 65.1	UCX12 UCX12-39	T213	16.7
UCTX13-40 UCTX13	2 ½	65	8.8190 224	5.3937 137	0.8268 21	4.7638 121	1.6142 41	2.7559 70	1.2598 32	6.5748 167	5.9449 151	4.3701 111	2.7559 70	1.0630 27	1.8110 46	1.1890 30.2	2.9370 74.6	UCX13-40 UCX13	T214	17.5
UCTX14-43 UCTX14	2 11/16	70	9.1339 232	5.5118 140	0.8268 21	4.7638 121	1.6142 41	2.7559 70	1.2598 32	6.5748 167	5.9449 151	4.3701 111	2.7559 70	1.0630 27	1.8898 48	1.3110 33.3	3.0630 77.8	UCX14-43 UCX14	T215	16.4
UCTX15-47 UCTX15 UCTX15-48	2 15/16 3	75	9.2520 235	5.5118 140	0.8268 21	4.7638 121	1.6142 41	2.7559 70	1.2598 32	7.2441 184	6.4961 165	4.3701 111	2.7559 70	1.0630 27	2.0079 51	1.3110 33.3	3.2520 82.6	UCX15-47 UCX15 UCX15-48	TX15	19.0
UCTX17 UCTX17-55 UCTX17-56	3 7/16 3 ½	85	10.2362 260	6.3780 162	1.1024 28	6.1811 157	1.8898 48	2.8740 73	1.4961 38	7.7953 198	6.8110 173	4.8819 124	2.8740 73	1.1024 28	2.1260 54	1.5630 39.7	3.7795 96	UCX17 UCX17-55 UCX17-56	TX17	26.3