SAPA

Eccentric Locking Collar • Narrow Inner Ring • Solid Base Cast Housing

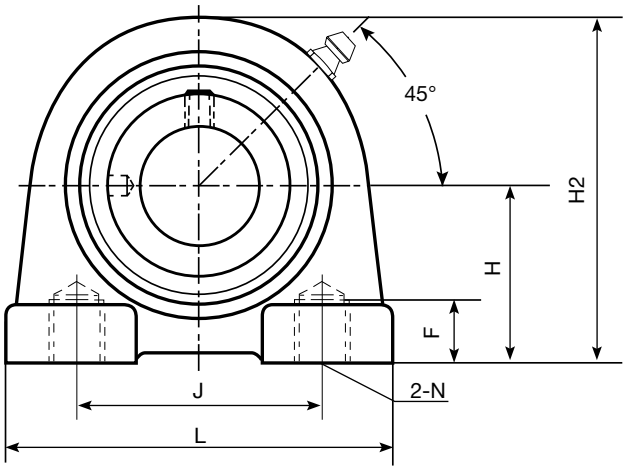

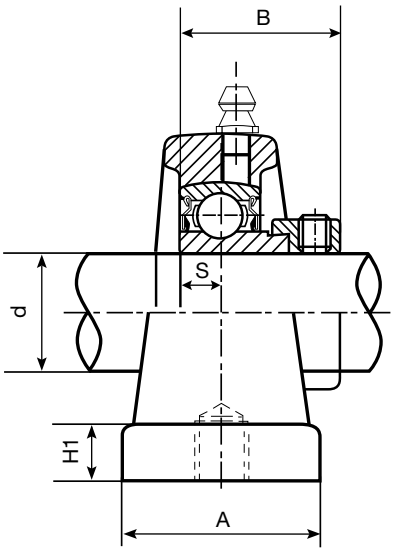

K Type Seal

HLU Unit No.	Shaft Diameter in.	Shaft Diameter mm	Dimensions (in.) (mm) H	L	J	A	H1	H2	F	S	B	Tapped Holes 2-N	Bearing No.	Housing No.	Weight lbs
SAPA204-12G **SAPA204G**	¾	20	1.3110 33.3	2.8740 73	2.0000 50.8	1.4961 38	0.4331 11	2.5591 65	1/2 13	0.2953 7.5	0.8465 21.5	⅜ - 16UNC	**SA204-12G** **SA204G**	PA204	1.30
SAPA205-14G **SAPA205-15G** **SAPA205G** **SAPA205-16G**	⅞ 15/16 1	25	1.4370 36.5	2.9921 76	2.0000 50.8	1.4961 38	0.4724 12	2.7953 71	1/2 13	0.2953 7.5	1.2205 31	⅜ - 16UNC	**SA205-14G** **SA205-15G** **SA205G** **SA205-16G**	PA205	1.50
SAPA206-17G **SAPA206-18G** **SAPA206G** **SAPA206-19G** **SAPA206-20G**	1 1/16 1 ⅛ 1 3/16 1 ¼	30	1.6890 42.9	4.0157 102	3.0000 76.2	1.4961 38	0.4724 12	3.4252 87	5/8 16	0.3543 9.0	1.4055 35.7	7/16 - 14UNC	**SA206-17G** **SA206-18G** **SA206G** **SA206-19G** **SA206-20G**	PA206	2.60
SAPA207-20G **SAPA207-21G** **SAPA207-22G** **SAPA207G** **SAPA207-23G**	1 ¼ 1 5/16 1 ⅜ 1 7/16	35	1.8740 47.6	4.2520 108	3.2480 82.5	1.8898 48	0.4724 12	3.7402 95	3/4 19	0.3740 9.5	1.5313 38.9	½ - 13UNC	**SA207-20G** **SA207-21G** **SA207-22G** **SA207G** **SA207-23G**	PA207	3.55
SAPA208-24G **SAPA208-25G** **SAPA208G**	1 ½ 1 9/16	40	1.9370 49.2	4.6260 117.5	3.5000 88.9	1.8898 48	0.4724 12	3.9370 100	3/4 19	0.4331 11.0	1.7205 43.7	½ - 13UNC	**SA208-24G** **SA208-25G** **SA208G**	PA208	4.20
SAPA209-26G **SAPA209-27G** **SAPA209-28G** **SAPA209G**	1 ⅝ 1 11/16 1 ¾	45	2.1260 54	5.0000 127	3.7520 95.3	2.0079 51	0.4724 12	4.2520 108	3/4 19	0.4331 11.0	1.7205 43.7	½ - 13UNC	**SA209-26G** **SA209-27G** **SA209-28G** **SA209G**	PA209	5.00
SAPA210-30G **SAPA210-31G** **SAPA210G** **SAPA210-32G**	1 ⅞ 1 15/16 2	50	2.2500 57.15	5.5118 140	4.0000 101.6	2.0079 51	0.5512 14	4.6260 117.5	31/32 25	0.4331 11.0	1.7205 43.7	⅝ - 11UNC	**SA210-30G** **SA210-31G** **SA210G** **SA210-32G**	PA210	6.10

Normally supplied as relube with “G” suffix.
Non-relube units available. Please specify non-relube.